zenitel

DATASHEET



1008113020

TCIA-2

Analog over IP Intercom

Door Intercom | Turbine | IP66 | IK10 | Automatic Volume | HD Voice

Automatic Gain Control | Active Noise Cancelling | Voice Activity Detection

Description

- Vandal resistant Analog over IP intercom
- Combine the network security of an analog intercom with the audio features of an IP intercom.
- Up to 60 meters extended analog interface keeps your IP network port in protected area.
- Background noise cancellation
- Dirt, dust and water resistant - rating IP-66

www.zenitel.com info@zenitel.com Last revision date: 2024-03-20 16:11

Zenitel and its subsidiaries assume no responsibility for any errors that may appear in this publication, or for damages arising from the information therein. Zenitel products are developed and marketed by Zenitel. The company's Quality Assurance System is certified to meet the requirements in NS-EN ISO 9001. Zenitel reserves the right to modify designs and alter specifications without notice.

ZENITEL PROPRIETARY. This document and its supplementing elements, contain Zenitel or third party information which is proprietary and confidential. Any disclosure, copying, distribution or use is prohibited, if not otherwise explicitly agreed in writing with Zenitel. Any authorized reproduction, in part or in whole, must include this legend; Zenitel – All rights reserved.

- Built to last with robust die-cast aluminum frame - rating IK10
- Stainless steel front plate with one button
- Ideal for Building Security and Public Environments where you don't want to expose your physical IP network.

Zenitel's Air Gap Solution:

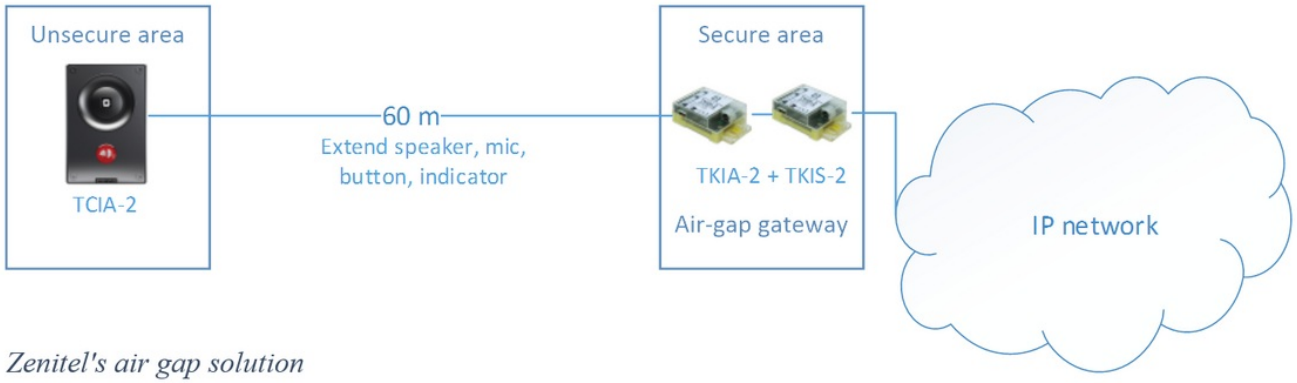

Zenitel's air gap solution

Technical Dimensions

Zenitel and its subsidiaries assume no responsibility for any errors that may appear in this publication, or for damages arising from the information therein. Zenitel products are developed and marketed by Zenitel. The company's Quality Assurance System is certified to meet the requirements in NS-EN ISO 9001. Zenitel reserves the right to modify designs and alter specifications without notice.

ZENITEL PROPRIETARY. This document and its supplementing elements, contain Zenitel or third party information which is proprietary and confidential. Any disclosure, copying, distribution or use is prohibited, if not otherwise explicitly agreed in writing with Zenitel. Any authorized reproduction, in part or in whole, must include this legend; Zenitel – All rights reserved.

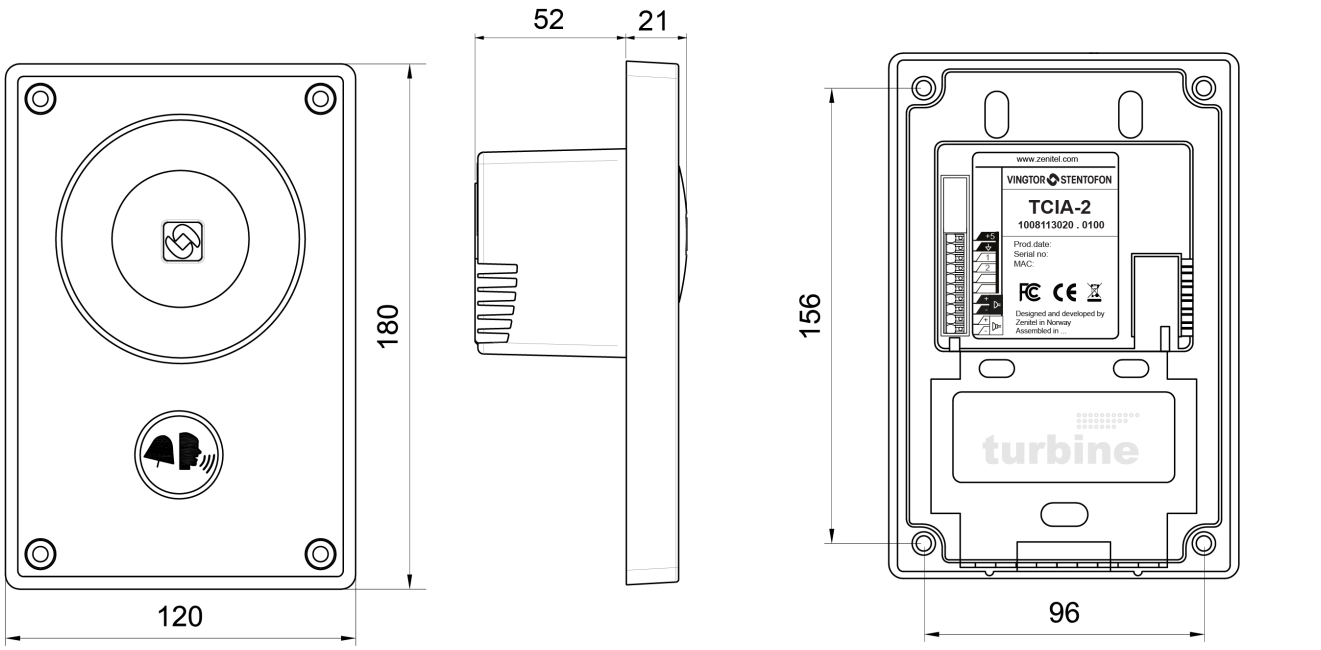

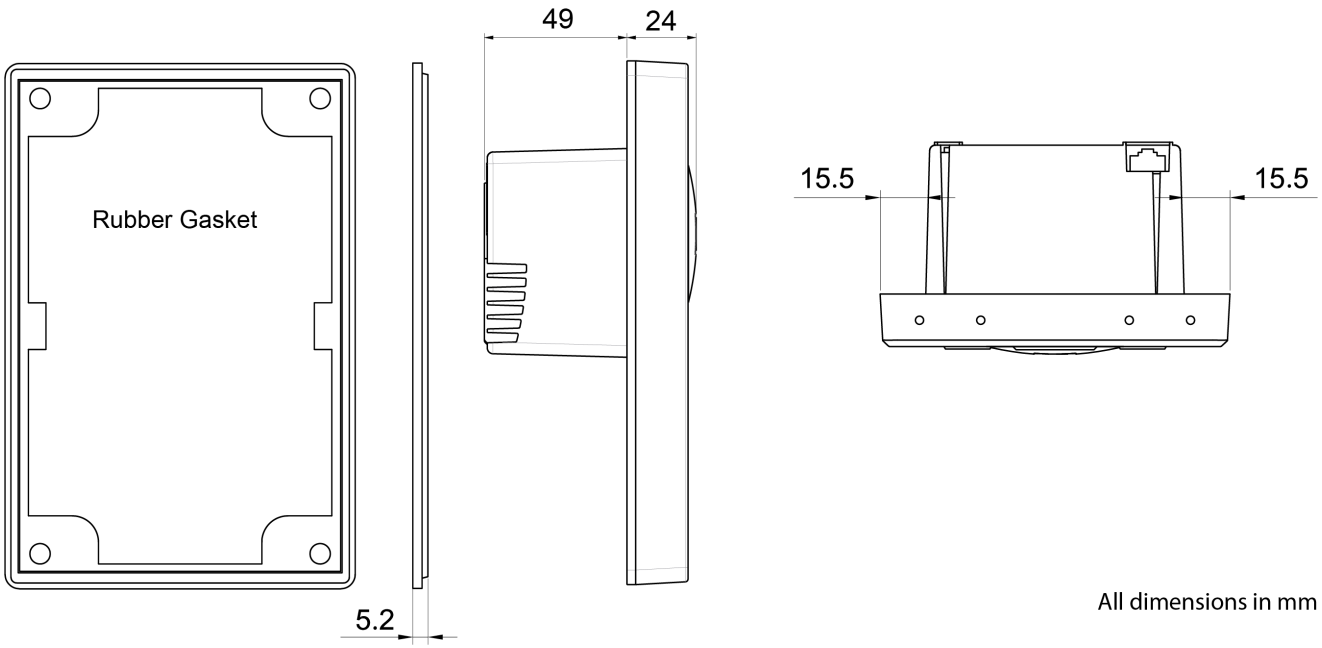

All dimensions in mm

Zenitel and its subsidiaries assume no responsibility for any errors that may appear in this publication, or for damages arising from the information therein. Zenitel products are developed and marketed by Zenitel. The company's Quality Assurance System is certified to meet the requirements in NS-EN ISO 9001. Zenitel reserves the right to modify designs and alter specifications without notice.

ZENITEL PROPRIETARY. This document and its supplementing elements, contain Zenitel or third party information which is proprietary and confidential. Any disclosure, copying, distribution or use is prohibited, if not otherwise explicitly agreed in writing with Zenitel. Any authorized reproduction, in part or in whole, must include this legend; Zenitel – All rights reserved.

Specifications

AUDIO

Loudspeaker impedance	8 ohm
Microphone technology	Analog MEMS, omni directional microphone

HARDWARE

Connector	1 x RJ45
Power	Powered from gateway
Call indication	LED integrated in large button

www.zenitel.com info@zenitel.com Last revision date: 2024-03-20 16:11

Zenitel and its subsidiaries assume no responsibility for any errors that may appear in this publication, or for damages arising from the information therein. Zenitel products are developed and marketed by Zenitel. The company's Quality Assurance System is certified to meet the requirements in NS-EN ISO 9001. Zenitel reserves the right to modify designs and alter specifications without notice.

ZENITEL PROPRIETARY. This document and its supplementing elements, contain Zenitel or third party information which is proprietary and confidential. Any disclosure, copying, distribution or use is prohibited, if not otherwise explicitly agreed in writing with Zenitel. Any authorized reproduction, in part or in whole, must include this legend; Zenitel – All rights reserved.

CONSTRUCTION

Dimensions (HxWxD)	180 x 120 x 73 mm / 7.1” x 4.7” x 2.9”
Dimensions after flush mount	180 x 120 x 24 mm / 7.1” x 4.7” x 0.9”
Dimensions with on wall box	180 x 120 x 86 mm / 7.1” x 4.7” x 3.4”
Weight	1 kg / 2.2 lbs.
Faceplate material	3 mm / 0.12” stainless steel - AISI 403
Base/frame material	3 mm / 0.12” aluminum alloy - A413.0, AlSi12Se, anodized and painted
Electronics cover material	Polycarbonate (translucent)
Gasket material	Silicone rubber
Fastening bracket material	SECC steel
Button material	3 mm / 0.12” Polycarbonate (transparent)
Button travel length	1.25 mm
Button activation force	350 gf
Button push-cycles before failure	300 000
Loudspeaker poke protection, large diameter object	3D cast aluminum speaker grille
Loudspeaker poke protection, small diameter objects	Stainless steel mesh, acoustically transparent

Zenitel and its subsidiaries assume no responsibility for any errors that may appear in this publication, or for damages arising from the information therein. Zenitel products are developed and marketed by Zenitel. The company’s Quality Assurance System is certified to meet the requirements in NS-EN ISO 9001. Zenitel reserves the right to modify designs and alter specifications without notice.

ZENITEL PROPRIETARY. This document and its supplementing elements, contain Zenitel or third party information which is proprietary and confidential. Any disclosure, copying, distribution or use is prohibited, if not otherwise explicitly agreed in writing with Zenitel. Any authorized reproduction, in part or in whole, must include this legend; Zenitel – All rights reserved.

ENVIRONMENT AND COMPLIANCES

IP rating	IP-66, tested according to EN 60529 (applies when mounted in TA-1 back box)
IK rating	IK 10, tested according to EN 62262
Operating temperature range	-40° to 70° C / -40° to 158 ° F
Storage temperature range	-40° to 70° C / -40° to 158 ° F
Realtive humidity	< 95% not condensing
Corrosion	Salty mist. tested according to EN60945
Vibration	Tested according to EN60945
UV-resistant	Yes
EMC	CE and FCC Part 15

OTHER SPECIFICATIONS

Country of manufacture	Poland

Accessories

Zenitel and its subsidiaries assume no responsibility for any errors that may appear in this publication, or for damages arising from the information therein. Zenitel products are developed and marketed by Zenitel. The company's Quality Assurance System is certified to meet the requirements in NS-EN ISO 9001. Zenitel reserves the right to modify designs and alter specifications without notice.

ZENITEL PROPRIETARY. This document and its supplementing elements, contain Zenitel or third party information which is proprietary and confidential. Any disclosure, copying, distribution or use is prohibited, if not otherwise explicitly agreed in writing with Zenitel. Any authorized reproduction, in part or in whole, must include this legend; Zenitel – All rights reserved.



TA-1

Turbine Compact Onwall Back Box

Item Number: 1008140010



TA-2

US 2-Gang 3½" Deep Backbox

Item Number: 1008140020



TA-5

Bracket for US 2 GANG Double Depth Back Box

Item Number: 1008140050



TA-18

Turbine Compact Flush-Mount Back Box

Item Number: 1008140180



TA-14

Microphone windshield for TCIS / TCIV

Item Number: 1008140140

Used With

www.zenitel.com info@zenitel.com Last revision date: 2024-03-20 16:11

Zenitel and its subsidiaries assume no responsibility for any errors that may appear in this publication, or for damages arising from the information therein. Zenitel products are developed and marketed by Zenitel. The company's Quality Assurance System is certified to meet the requirements in NS-EN ISO 9001. Zenitel reserves the right to modify designs and alter specifications without notice.

ZENITEL PROPRIETARY. This document and its supplementing elements, contain Zenitel or third party information which is proprietary and confidential. Any disclosure, copying, distribution or use is prohibited, if not otherwise explicitly agreed in writing with Zenitel. Any authorized reproduction, in part or in whole, must include this legend; Zenitel – All rights reserved.



TKIS-2 Audio Intercom Kit

VoIP Intercom Module

Item Number: 1008131020



TKIA-2

Analog over IP Gateway

Item Number: 1008133020



TCIA-2-P

Package with TCIA-2,TKIA-2,TKIS-2

Item Number: 1008113120

www.zenitel.com info@zenitel.com Last revision date: 2024-03-20 16:11

Zenitel and its subsidiaries assume no responsibility for any errors that may appear in this publication, or for damages arising from the information therein. Zenitel products are developed and marketed by Zenitel. The company's Quality Assurance System is certified to meet the requirements in NS-EN ISO 9001. Zenitel reserves the right to modify designs and alter specifications without notice.

ZENITEL PROPRIETARY. This document and its supplementing elements, contain Zenitel or third party information which is proprietary and confidential. Any disclosure, copying, distribution or use is prohibited, if not otherwise explicitly agreed in writing with Zenitel. Any authorized reproduction, in part or in whole, must include this legend; Zenitel – All rights reserved.