3005020066

CIS J2-J3 External Microphone Interface adapter

Console mounted plug with terminals for external handheld microphone for CIS P-3100/3101/3102/3130 and P-3132



Description

This is a console mounted 4pin connector for handheld microphone to be used with the CIS Talck Back Maser Unit P-3100 / P-3101 /P-3102 / P-3130 / P-3132

Connects to P-3100 and P-3101: J2, pin 5-8

Connects to P-3102, P-3130 and P-3132: J3, pin 5-8

Technical Dimensions

www.zenitel.com info@zenitel.com Last revision date: 2023-12-21 15:44

Zenitel and its subsidiaries assume no responsibility for any errors that may appear in this publication, or for damages arising from the information therein. Zenitel products are developed and marketed by Zenitel. The company's Quality Assurance System is certified to meet the requirements in NS-EN ISO 9001. Zenitel reserves the right to modify designs and alter specifications without notice.

ZENITEL PROPRIETARY. This document and its supplementing elements, contain Zenitel or third party information which is proprietary and confidential. Any disclosure, copying, distribution or use is prohibited, if not otherwise explicitly agreed in writing with Zenitel. Any authorized reproduction, in part or in whole, must include this legend; Zenitel – All rights reserved.

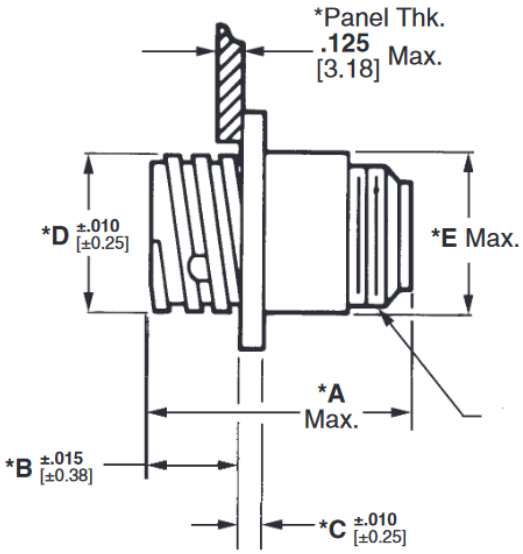

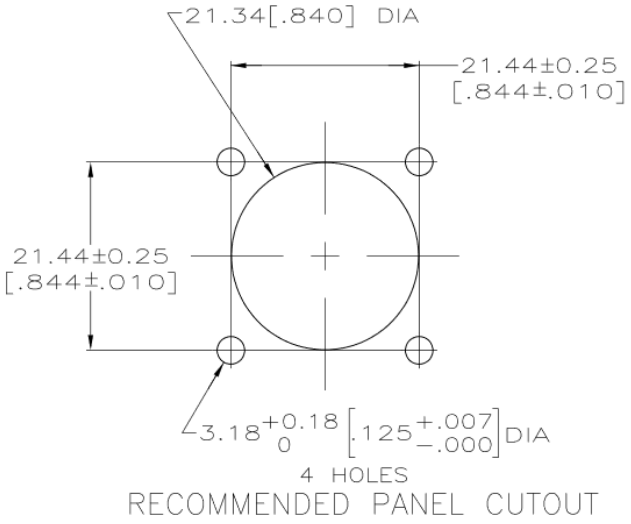

RECOMMENDED PANEL CUTOUT

Zenitel and its subsidiaries assume no responsibility for any errors that may appear in this publication, or for damages arising from the information therein. Zenitel products are developed and marketed by Zenitel. The company's Quality Assurance System is certified to meet the requirements in NS-EN ISO 9001. Zenitel reserves the right to modify designs and alter specifications without notice.

ZENITEL PROPRIETARY. This document and its supplementing elements, contain Zenitel or third party information which is proprietary and confidential. Any disclosure, copying, distribution or use is prohibited, if not otherwise explicitly agreed in writing with Zenitel. Any authorized reproduction, in part or in whole, must include this legend; Zenitel – All rights reserved.

Specifications

To install:
Remove power from the system (CIS Master Station)
Drill holes for the square AMP panel connector according to the measures specified under "Dimensions"
Remove the rear box of the CIS Master STATION (P-3100 / P-3101 / P-3102 / P-3130 / P-3130 / P-3132
Loosen J2 (P-3100 or P-3101) or J3 (P-3102 / P-3130 / P-3132)
If the existing J2/J3 connector is longer than pin 4 (Loudspeaker/Vol.Pots connection) it must be cut (fine wirecutter or sharp knife)
insert the "CIS J2-J3 External Microphone Interface adapter" throug one of the entry holes in the rear box
Carefully insert the "CIS J2-J3 External Microphone Interface adapter" SIL connector together with the newly cut Loudspeaker/Vol.Pots connector into the pin-header on the PCB
Make sure there is no conductive remains on the PCB or elsewhere that might cause short circuits
Replace and fasten the rear box
Power up the system again

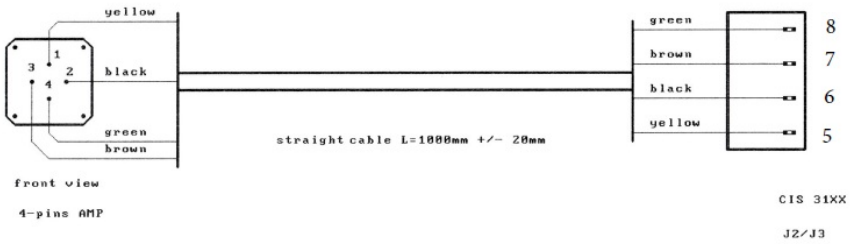

Zenitel and its subsidiaries assume no responsibility for any errors that may appear in this publication, or for damages arising from the information therein. Zenitel products are developed and marketed by Zenitel. The company's Quality Assurance System is certified to meet the requirements in NS-EN ISO 9001. Zenitel reserves the right to modify designs and alter specifications without notice.

ZENITEL PROPRIETARY. This document and its supplementing elements, contain Zenitel or third party information which is proprietary and confidential. Any disclosure, copying, distribution or use is prohibited, if not otherwise explicitly agreed in writing with Zenitel. Any authorized reproduction, in part or in whole, must include this legend; Zenitel – All rights reserved.

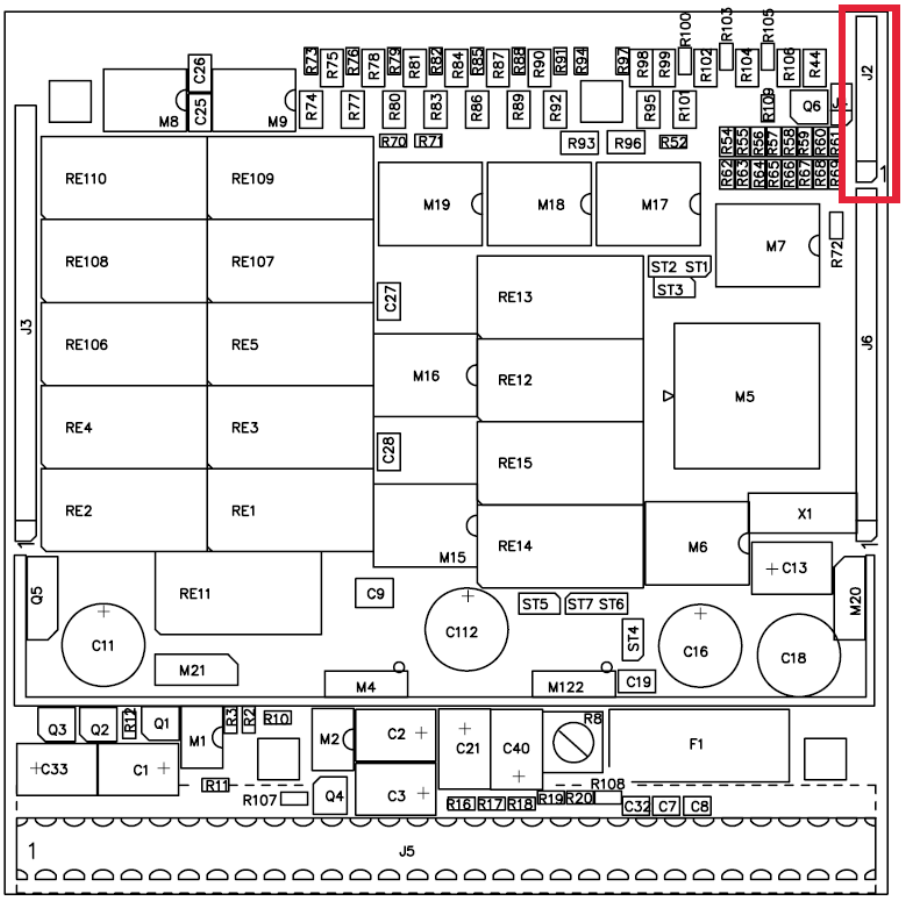

Zenitel and its subsidiaries assume no responsibility for any errors that may appear in this publication, or for damages arising from the information therein. Zenitel products are developed and marketed by Zenitel. The company's Quality Assurance System is certified to meet the requirements in NS-EN ISO 9001. Zenitel reserves the right to modify designs and alter specifications without notice.

ZENITEL PROPRIETARY. This document and its supplementing elements, contain Zenitel or third party information which is proprietary and confidential. Any disclosure, copying, distribution or use is prohibited, if not otherwise explicitly agreed in writing with Zenitel. Any authorized reproduction, in part or in whole, must include this legend; Zenitel – All rights reserved.

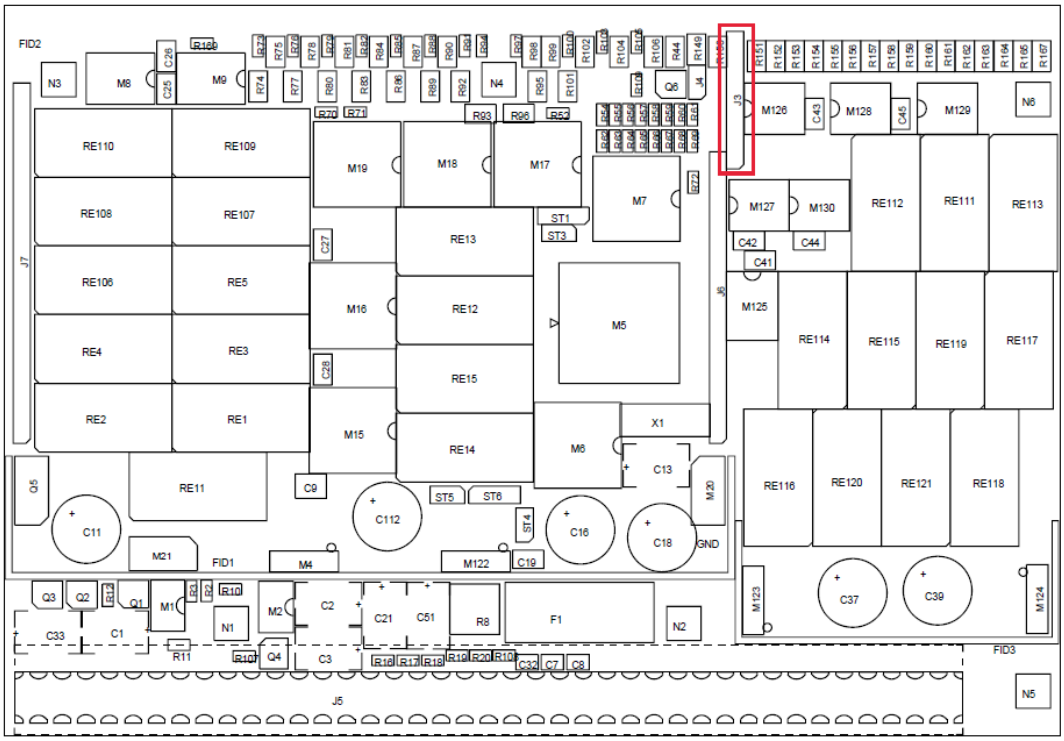

Used With



P-3100

CIS Talkback Master Station

Item Number: 4000016771



P-3101

CIS Talkback Master Station

Item Number: 4000016774



P-3102

CIS Talkback Master Station

Item Number: 4000016785



P-3130

CIS Talkback Master Station

Item Number: 4000016791

Zenitel and its subsidiaries assume no responsibility for any errors that may appear in this publication, or for damages arising from the information therein. Zenitel products are developed and marketed by Zenitel. The company's Quality Assurance System is certified to meet the requirements in NS-EN ISO 9001. Zenitel reserves the right to modify designs and alter specifications without notice.

ZENITEL PROPRIETARY. This document and its supplementing elements, contain Zenitel or third party information which is proprietary and confidential. Any disclosure, copying, distribution or use is prohibited, if not otherwise explicitly agreed in writing with Zenitel. Any authorized reproduction, in part or in whole, must include this legend; Zenitel – All rights reserved.



P-3132

Remote Talkback Master Station

Item Number: 4000016787



P-9017

Handheld microphone, noise cancelling

Item Number: 4000014197

www.zenitel.com info@zenitel.com Last revision date: 2023-12-21 15:44

Zenitel and its subsidiaries assume no responsibility for any errors that may appear in this publication, or for damages arising from the information therein. Zenitel products are developed and marketed by Zenitel. The company's Quality Assurance System is certified to meet the requirements in NS-EN ISO 9001. Zenitel reserves the right to modify designs and alter specifications without notice.

ZENITEL PROPRIETARY. This document and its supplementing elements, contain Zenitel or third party information which is proprietary and confidential. Any disclosure, copying, distribution or use is prohibited, if not otherwise explicitly agreed in writing with Zenitel. Any authorized reproduction, in part or in whole, must include this legend; Zenitel – All rights reserved.