2310111158

IC-NDC-JB-V2 Junction box

Junction box for IC-NDC Dome Cameras DS-1280ZJ-DM55

- Aluminum alloy with surface spray treatment
- With cable outlet(s)
- Applies to both indoor conditons, and outdoor conditons

Description

NOTICE

- The mount should be installed on the flat surface.
- Waterproof rubber is necessary for the outdoor application.
- The wall must be capable of supporting at least 3 times as much as the total weight of the camera, and the junction box.
- The maximum load capacity of the junction box is 2 kg (4.4 lb.).

Technical Dimensions

www.zenitel.com info@zenitel.com Last revision date: 2023-06-02 17:20

Zenitel and its subsidiaries assume no responsibility for any errors that may appear in this publication, or for damages arising from the information therein. Zenitel products are developed and marketed by Zenitel. The company's Quality Assurance System is certified to meet the requirements in NS-EN ISO 9001. Zenitel reserves the right to modify designs and alter specifications without notice.

ZENITEL PROPRIETARY. This document and its supplementing elements, contain Zenitel or third party information which is proprietary and confidential. Any disclosure, copying, distribution or use is prohibited, if not otherwise explicitly agreed in writing with Zenitel. Any authorized reproduction, in part or in whole, must include this legend; Zenitel – All rights reserved.

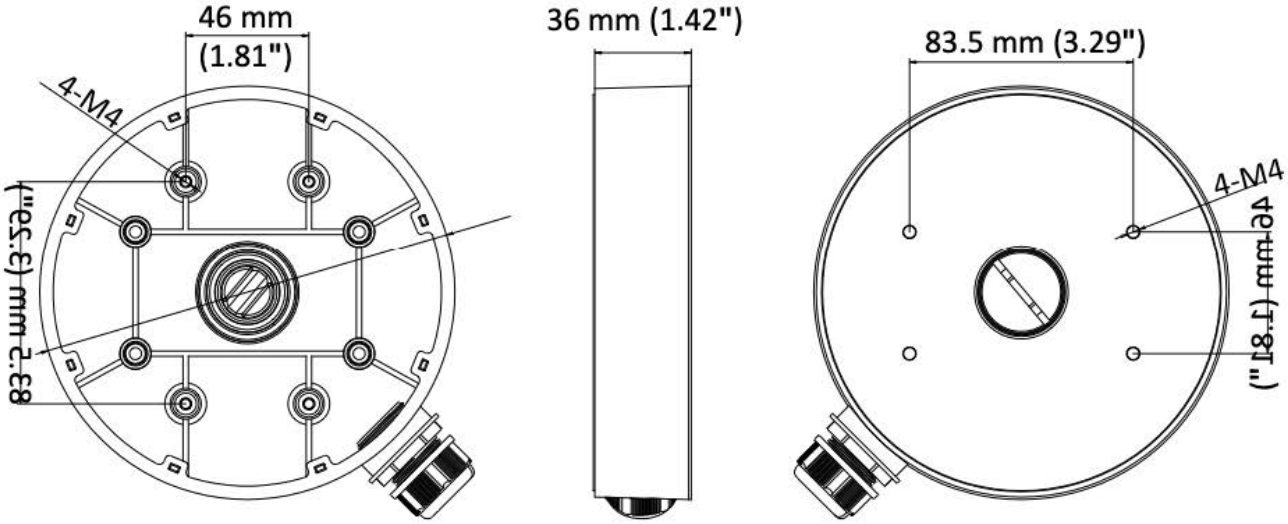

www.zenitel.com info@zenitel.com Last revision date: 2023-06-02 17:20

Zenitel and its subsidiaries assume no responsibility for any errors that may appear in this publication, or for damages arising from the information therein. Zenitel products are developed and marketed by Zenitel. The company's Quality Assurance System is certified to meet the requirements in NS-EN ISO 9001. Zenitel reserves the right to modify designs and alter specifications without notice.

ZENITEL PROPRIETARY. This document and its supplementing elements, contain Zenitel or third party information which is proprietary and confidential. Any disclosure, copying, distribution or use is prohibited, if not otherwise explicitly agreed in writing with Zenitel. Any authorized reproduction, in part or in whole, must include this legend; Zenitel – All rights reserved.

Specifications

SPECIFICATION	
Model	DS-1280ZJ-DM55
Model	Junction Box
Appearance	Hikvision White
Application	Suitable for dome camera
Material	Aluminum Alloy
Dimension	Φ 155 mm × 36 mm (Φ 6.1" × 1.42")
Weight	300 g (0.66 lb.)

Used With

IC-NDC-2MP-V2

2 MP Indoor WDR Motorized Varifocal Dome Network CCTV Camera

Item Number: 2310111157

www.zenitel.com info@zenitel.com

Last revision date: 2023-06-02 17:20

Zenitel and its subsidiaries assume no responsibility for any errors that may appear in this publication, or for damages arising from the information therein. Zenitel products are developed and marketed by Zenitel. The company's Quality Assurance System is certified to meet the requirements in NS-EN ISO 9001. Zenitel reserves the right to modify designs and alter specifications without notice.

ZENITEL PROPRIETARY. This document and its supplementing elements, contain Zenitel or third party information which is proprietary and confidential. Any disclosure, copying, distribution or use is prohibited, if not otherwise explicitly agreed in writing with Zenitel. Any authorized reproduction, in part or in whole, must include this legend; Zenitel – All rights reserved.