2340020006

CAREEX-6T

Ex Loudspeaker Double Faces 6 W

- Aluminuim double faced loudspeaker
- Made for cabins, hallways, etc. in hazardous areas
- 100 V line transformer
- Adjustable tapping plugs

Description

When mounting the loudspeaker please ensure that it is re-assembled in the same manner in which it was received.

Fasten loudspeaker to wall or ceiling with 4 screws by use of the extruded aluminium brackets on each side. Enter the e-chamber by loosening the screws on the lid and terminate the cable in the screw terminal. Fasten lid screws with a torque of 2 - 3 Nm to assure the IP rating.For optimum performance, always use the correct voltage / power and operate within the frequency limits as stated. Use only certified/specified cable glands and blanking plugs.Do not open loudspeaker when energized. Ex loudspeakers must be grounded properly, using marked screw.

Technical Dimensions

Zenitel and its subsidiaries assume no responsibility for any errors that may appear in this publication, or for damages arising from the information therein. Zenitel products are developed and marketed by Zenitel. The company's Quality Assurance System is certified to meet the requirements in NS-EN ISO 9001. Zenitel reserves the right to modify designs and alter specifications without notice.

ZENITEL PROPRIETARY. This document and its supplementing elements, contain Zenitel or third party information which is proprietary and confidential. Any disclosure, copying, distribution or use is prohibited, if not otherwise explicitly agreed in writing with Zenitel. Any authorized reproduction, in part or in whole, must include this legend; Zenitel – All rights reserved.

NOTES:

1- All outside nuts, bolts and washers in Stainless Steel

LEFT VIEW

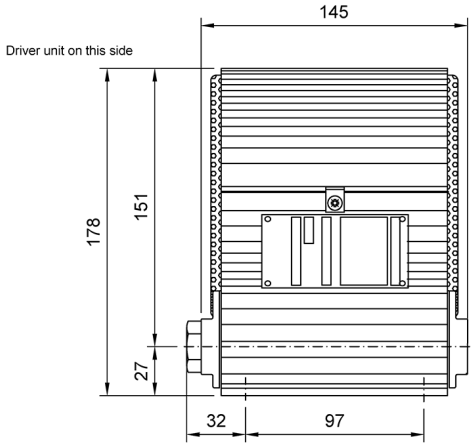

FRONT VIEW

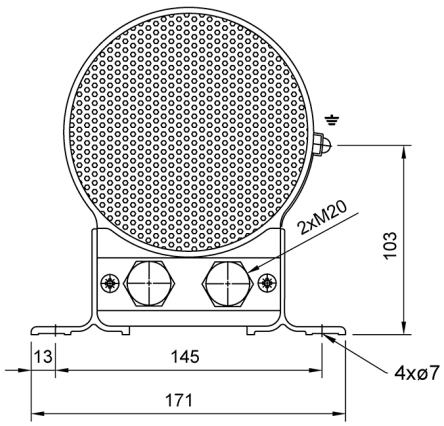

CIRCUIT DIAGRAM

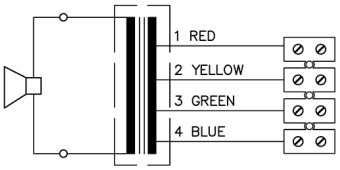

Secondary nominal tappings

1:2	6,0W
2:3	3,0W
3:4	1,5W
1:3	1,0W
2:4	0,5W
1:4	0,3W

www.zenitel.com info@zenitel.com Last revision date: 2022-08-26 09:27

Zenitel and its subsidiaries assume no responsibility for any errors that may appear in this publication, or for damages arising from the information therein. Zenitel products are developed and marketed by Zenitel. The company's Quality Assurance System is certified to meet the requirements in NS-EN ISO 9001. Zenitel reserves the right to modify designs and alter specifications without notice.

ZENITEL PROPRIETARY. This document and its supplementing elements, contain Zenitel or third party information which is proprietary and confidential. Any disclosure, copying, distribution or use is prohibited, if not otherwise explicitly agreed in writing with Zenitel. Any authorized reproduction, in part or in whole, must include this legend; Zenitel – All rights reserved.

Specifications

GENERAL

Material / Color	Aluminum / anodized
Mounting	Foot bracket
Termination	E-chamber, screw terminals
Weight (with transformer)	4.0 kg
IP rating (e-chamber)	IP-54
Max. / min. amb. temp	40°C / -20°C
Rated / Max power	6 W / 6 W
SPL 1W / 1 m	90 dB
SPL rated power	97 dB
Effective frequency range	160 – 20000 Hz
Dispersion (-6dB) 1kHz / 4kHz	180° / 90°

www.zenitel.com info@zenitel.com

Last revision date: 2022-08-26 09:27

Zenitel and its subsidiaries assume no responsibility for any errors that may appear in this publication, or for damages arising from the information therein. Zenitel products are developed and marketed by Zenitel. The company's Quality Assurance System is certified to meet the requirements in NS-EN ISO 9001. Zenitel reserves the right to modify designs and alter specifications without notice.

ZENITEL PROPRIETARY. This document and its supplementing elements, contain Zenitel or third party information which is proprietary and confidential. Any disclosure, copying, distribution or use is prohibited, if not otherwise explicitly agreed in writing with Zenitel. Any authorized reproduction, in part or in whole, must include this legend; Zenitel – All rights reserved.