1490005010

ITSV-5

HD IP Video Phone with 8" Screen



- 16 lines with up to 16 SIP accounts
- 8” (1280×800) capacitive 10-point touch screen HD IPS LCD
- Built-in 2 mega-pixel CMOS tiltable camera with privacy shutter
- 12-way audio conferencing and 3-way 1080p 30fps video conferencing capability
- Dual-mic HD speakerphone with noise reduction, advanced echo cancellation, and excellent double-talk performance
- Seamless Integration - Fully compatible with Zenitel Connect Pro, ICX-AlphaCom, IC-EDGE, and SIP-based systems.

Zenitel Connect | Video Intercom | SIP | Bluetooth | IC-Edge | ICX-AlphaCom | Audio | HD Voice | Video | H.264

Description

The ITSV-5 is a powerful IP video phone featuring Android 11, an 8” touch screen, real-time HD video telephony, built-in WiFi, Bluetooth, and more. The ITSV-5 delivers advanced SIP telephony features and out-of-the-box integration with our Zenitel Connect Pro, IC-EDGE and ICX-AlphaCom IP Intercom Platforms.

For more information go to Zenitel Wiki

Technical Dimensions

www.zenitel.com info@zenitel.com Last revision date: 2025-10-17 12:06

Zenitel and its subsidiaries assume no responsibility for any errors that may appear in this publication, or for damages arising from the information therein. Zenitel products are developed and marketed by Zenitel. The company’s Quality Assurance System is certified to meet the requirements in NS-EN ISO 9001. Zenitel reserves the right to modify designs and alter specifications without notice.

ZENITEL PROPRIETARY. This document and its supplementing elements, contain Zenitel or third party information which is proprietary and confidential. Any disclosure, copying, distribution or use is prohibited, if not otherwise explicitly agreed in writing with Zenitel. Any authorized reproduction, in part or in whole, must include this legend; Zenitel – All rights reserved.

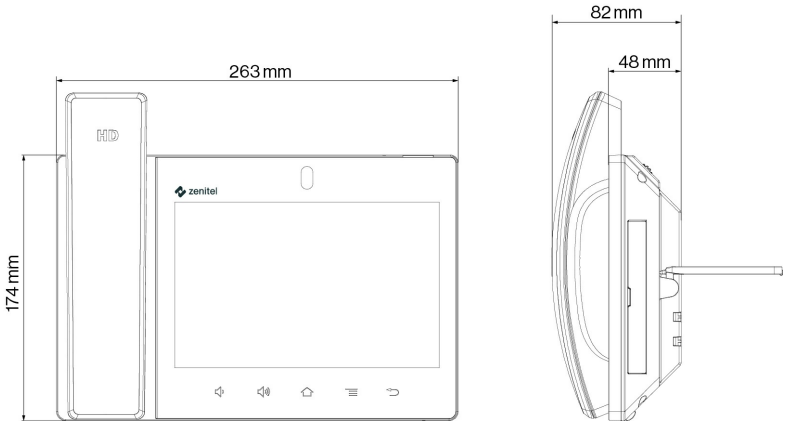

Zenitel and its subsidiaries assume no responsibility for any errors that may appear in this publication, or for damages arising from the information therein. Zenitel products are developed and marketed by Zenitel. The company's Quality Assurance System is certified to meet the requirements in NS-EN ISO 9001. Zenitel reserves the right to modify designs and alter specifications without notice.

ZENITEL PROPRIETARY. This document and its supplementing elements, contain Zenitel or third party information which is proprietary and confidential. Any disclosure, copying, distribution or use is prohibited, if not otherwise explicitly agreed in writing with Zenitel. Any authorized reproduction, in part or in whole, must include this legend; Zenitel – All rights reserved.

Specifications

GENERAL

Graphic Display	8” (1280x800) capacitive (10 points) touch screen IPS LCD
Camera	Tiltable 2 mega-pixel CMOS camera with privacy shutter, 1080P@30fps
Auxiliary Ports	RJ9 headset jack (allowing EHS with Plantronics headsets), 3.5mm stereo headset with microphone, USB 3.0 port, Type-C, HDMI-out, HDMI-in
Feature keys	2 function touch keys VOLUME +/-, 3 dedicated Android touch keys HOME, MENU, and BACK
Video Codec	H.263, H.264 BP/MP/HP
Video resolution	Up to 1080p
Video frame rate	Up to 30 fps
Operating temperature range	0˚C to +40˚C
Storage temperature range	-10˚C to +60˚C
Relative humidity	10% - 90% non-condensing
Power options	Power over Ethernet (PoE & PoE+) or power adapter.
Power over Ethernet	802.3af Class 3, 802.3at Class 4
Power adapter	Input: 100-240VAC 50-60Hz; Output 12VDC 1.5A
Network Interface	2 x RJ45 (Ethernet) 10/100/1000 Mbps with integrated PoE/PoE+
Bluetooth	Integrated, Bluetooth 5 + EDR
Wi-Fi	Integrated, dual-band 2.4 & 5GHz with 802.11 a/b/g/n/ac/ax, 2T2R, Wi-Fi Display & AirPlay
Security	User and administrator level passwords, MD5 and MD5-sess based authentication, 256-bit AES encrypted configuration file, TLS, SRTP, HTTPS, 802.1x media access control, Kensington Security Slot (Kensington Lock) support, anti-hacking secure boot
Protocols/Standards	SIP RFC3261, TCP/IP/UDP, RTP/RTCP, HTTP/HTTPS, ARP, ICMP, DNS (A record, SRV, NAPTR), DHCP, PPPoE, SSH, TFTP, NTP, STUN, SIMPLE, LLDPMED, LDAP, TR-069, 802.1x, TLS, SRTP, IPv6, OpenVPN®.
Audio technology	Wide-band Opus, wide-band G.722, G.711µ/a, G.729A/B, G.726-32, iLBC, in-band and out-ofband DTMF (In audio, RFC2833, SIP INFO),

Zenitel and its subsidiaries assume no responsibility for any errors that may appear in this publication, or for damages arising from the information therein. Zenitel products are developed and marketed by Zenitel. The company’s Quality Assurance System is certified to meet the requirements in NS-EN ISO 9001. Zenitel reserves the right to modify designs and alter specifications without notice.

ZENITEL PROPRIETARY. This document and its supplementing elements, contain Zenitel or third party information which is proprietary and confidential. Any disclosure, copying, distribution or use is prohibited, if not otherwise explicitly agreed in writing with Zenitel. Any authorized reproduction, in part or in whole, must include this legend; Zenitel – All rights reserved.

	VAD, CNG, AEC, PLC, AJB, AGC, ANS, Noise Shield 2.0
Language support	English, German, Italian, French, Spanish, Portuguese, Russian, Croatian, Chinese, Korean, Japanese, Czech.
Compliance	FCC: CFR 47 Part 15 Subpart B Class B; CFR 47 Part 15 Subpart C; CFR 47 Part 15 Subpart E; UL 60950-1 (power adapter); Part68 (HAC) CE: EN55032 Class B; EN55035;EN61000-3-2; EN61000-3-3; EN62368-1; EN300328; EN301893; EN301489-1; EN301489-17; EN62311; RoHS RCM: AS/ACIF S040 AS/CA S004; AS/NZS CISPR 32; AS/NZS 62368.1; AS/NZS 4268 HDMI Source and Sink, HAC
Dimension (WxLxH)	263 x 174 x 48 (WxLxH) mm
Weight	1.08 kg
Warranty	2 Years standard warranty, extendible up to total of 5 years (additional fee)

Accessories



Wall Mount Bracket for ITSV-5

Item Number: 1490009007

Used With



TCIV-2+ | Video intercom

IP and SIP Video Intercom

Item Number: 1008315020



TCIV-3+ | Video intercom

IP and SIP Video Intercom

Item Number: 1008315030



TCIV-5+ | Video intercom

IP and SIP Video Intercom

Item Number: 1008315050



TCIV-6+ | Video Intercom

IP and SIP Video Intercom

Item Number: 1008315060

Zenitel and its subsidiaries assume no responsibility for any errors that may appear in this publication, or for damages arising from the information therein. Zenitel products are developed and marketed by Zenitel. The company's Quality Assurance System is certified to meet the requirements in NS-EN ISO 9001. Zenitel reserves the right to modify designs and alter specifications without notice.

ZENITEL PROPRIETARY. This document and its supplementing elements, contain Zenitel or third party information which is proprietary and confidential. Any disclosure, copying, distribution or use is prohibited, if not otherwise explicitly agreed in writing with Zenitel. Any authorized reproduction, in part or in whole, must include this legend; Zenitel – All rights reserved.



TKIV+ Video Intercom kit

Turbine Video - VoIP Intercom Module

Item Number: 1008331010



TEIV-4+ | Video Intercom with RFID card reader space

IP & SIP Video Intercom with RFID card reader space

Item Number: 1008318240



TEIV-1+ | Video Intercom with Keypad and Display

IP and SIP Video Intercom with Keypad and Display

Item Number: 1008317110

Zenitel and its subsidiaries assume no responsibility for any errors that may appear in this publication, or for damages arising from the information therein. Zenitel products are developed and marketed by Zenitel. The company's Quality Assurance System is certified to meet the requirements in NS-EN ISO 9001. Zenitel reserves the right to modify designs and alter specifications without notice.

ZENITEL PROPRIETARY. This document and its supplementing elements, contain Zenitel or third party information which is proprietary and confidential. Any disclosure, copying, distribution or use is prohibited, if not otherwise explicitly agreed in writing with Zenitel. Any authorized reproduction, in part or in whole, must include this legend; Zenitel – All rights reserved.