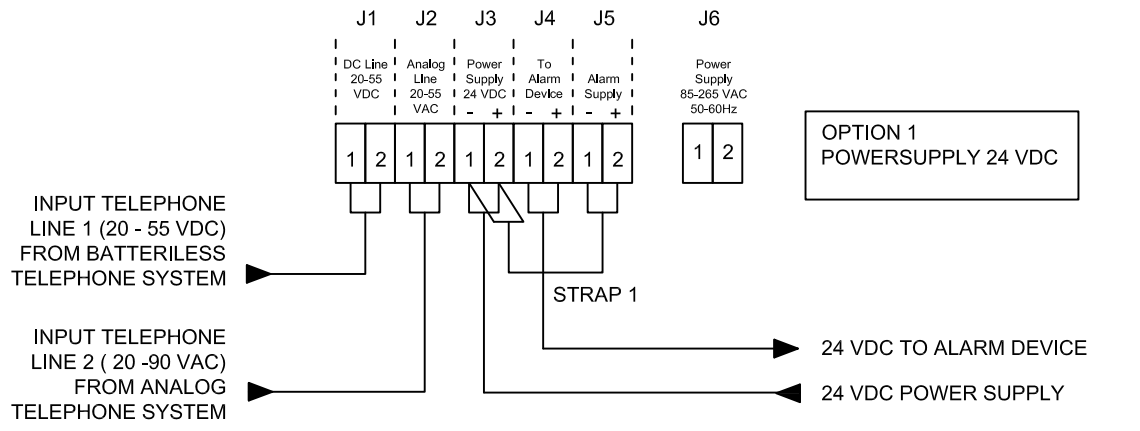

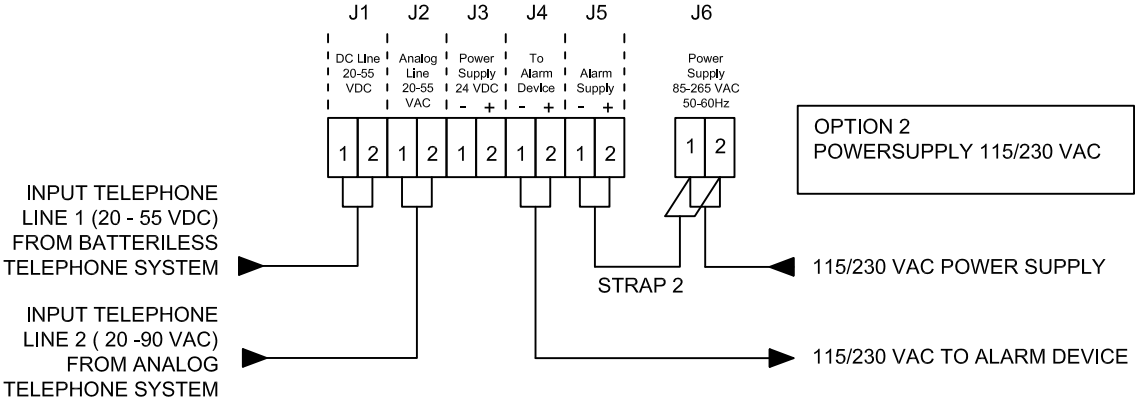

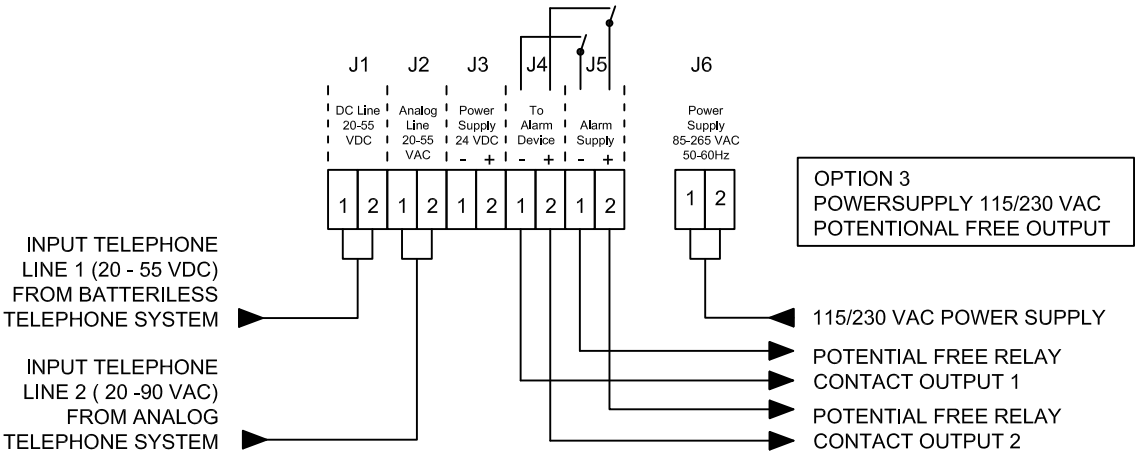

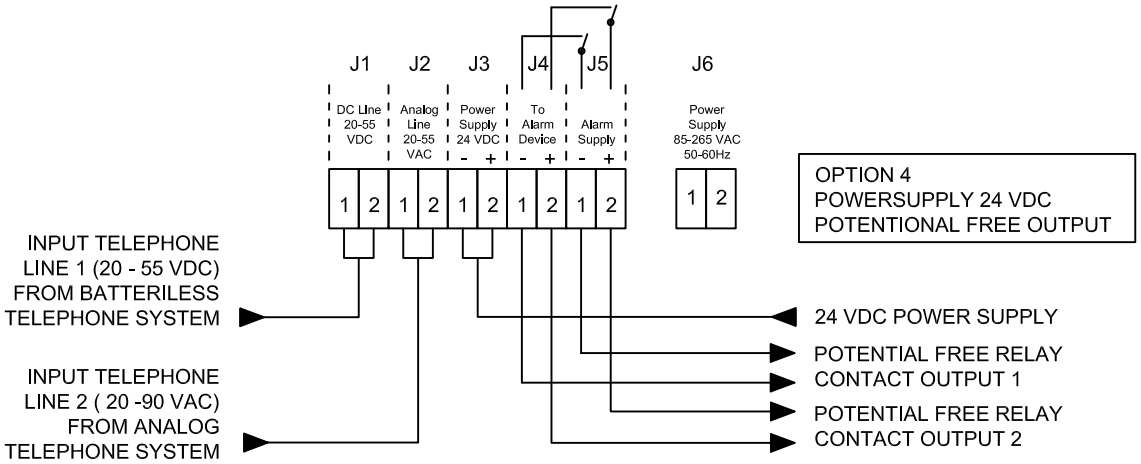

VINGTOR	COMMON EQUIPMENT Relaybox CRB-7 v.2 O.no.3006102026 Connections	Prepared by SEN	Date 14.05.2011	Project no:	Revision by
		Approved by	Date	Sheet 1/3	Rev.date
		Dwg.no. / File A100K11285			Rev. no. 00